# Development of Universal Jamming Gripper with a Force Feedback Mechanism

Takeshi NISHIDA, Daichi SHIGEHISA, Naoaki KAWASHIMA
Department of Mechanical and Control Engineering,
Kyushu Institute of Technology
Kitakyushu, Fukuoka, Japan,
Email: nishida@cntl.kyutech.ac.jp

Kenjiro TADAKUMA
Department of Mechanical Engineering,
Osaka University
Suita, Osaka, Japan

***Abstract*—A universal jamming gripper (UJG) that consists of a single mass of granular material encased in an elastic membrane, and a vacuum pump that extracts air can passively conform to a wide variety of arbitrarily shaped objects, and then vacuum-harden to grip the objects rigidly. In this study, an elastic membrane is first filled with various materials and a material suitable for the UJG is determined by verifying the grip force. Next, the optimal fill volume of the material is determined experimentally. Furthermore, it is shown experimentally that an appropriate press force exists for generating maximum grip force of the UJG. Finally, a force feedback mechanism of the UJG is developed for generating the appropriate press force, and its effectiveness is evaluated by experiment.**

## I. Introduction

Multifingered grippers and vacuum grippers are widely used in industrial factories, and development of various robotic end effectors for industrial robots is accelerated by diversification of automation technology. The conventional industrial robots handle various processes of operation by exchanging end effectors. The exchange process of end effectors is a bottleneck of the robot's high-speed work because it requires complicated equipment and programming. In recent years, several universal robot grippers have been developed to overcome the bottleneck, and the universal jamming gripper (UJG) [1][2] in particular has attracted researchers' attention. The UJG, which consists of a single mass of granular material encased in an elastic membrane, and a vacuum pump that extracts air can passively conform to a wide variety of arbitrarily shaped objects, and then vacuum-harden to grip the objects rigidly.

However, the following characteristics of the UJG have not been clarified: 1) the relationship or the characteristic of the type of granular material in the elastic membrane and generated grip force and 2) the timing of extraction of internal air. Thus, in this study, the following verification and development are carried out: 1) the elastic membrane is filled with several types of granular materials, and grip force and the characteristic are examined and 2) the optimal press force of the elastic membrane on target object is verified. Further we develop an automatic mechanism to generate the optimal grip force.

The remainder of this paper is organized as follows: Section II presents the composition of the UJG made for the evaluation test. In Section III, the experimental results of the relationship between the grip force and the type of material and between the grip force and filling volume in the elastic membrane are presented. In Section IV, the result of an experiment about the relation between the press force against the target object and the grip force is shown. In Section V and VI, the structure of an automatic mechanism for maintaining the optimal press force is explained, along with the experimental result. Finally, Section VII provides a summary of the paper.

## II. Universal Jamming Gripper

First, we developed a UJG shown in Fig. 1 based on a method described in the literature [2]. We used a latex balloon with a volume of 523 [cm$^3$] as the elastic membrane. An air vent port and an air filter were installed at the upper part of the UJG. Moreover, a tube of approximately 3 [m] length was connected to the air vent port, and a filter (SMC, ZFC76-B), hand valve (SMC, VM230-02-08), vacuum regulator (IVR20-C10B-G), and vacuum pump (ULVAC, DA-81S) were connected to the tube. The rated output of the vacuum pump is 88 [kPa]. The weight of the UJG is approximately 400 [g].

To grip objects, the UJG was operated in the following way:

1) The UJG is pressed against a target subject. We call this press operation.
2) The air inside the elastic membrane is sucked out with the vacuum pump, and the target object is held by the UJG. We call this grip operation.
3) The target object is operated by the UJG, we call this object operation.
4) The vacuum pump is suspended and the target object is detached. We call this release operation.

## III. Filling material and volume

Here, the results of exploratory experiments investigating the type and fill volume of a filling material suitable for the UJG are presented.

### A. Conditions and method

Adzuki beans, aromatic beads, and ground coffee, which are common materials, were chosen as filling materials, as shown in Fig.2. The weight of these materials is shown in Table I. Here, the filling ratio is the ratio of the volume of the

978-1-4799-5955-6/14/$31.00 ©2014 IEEE

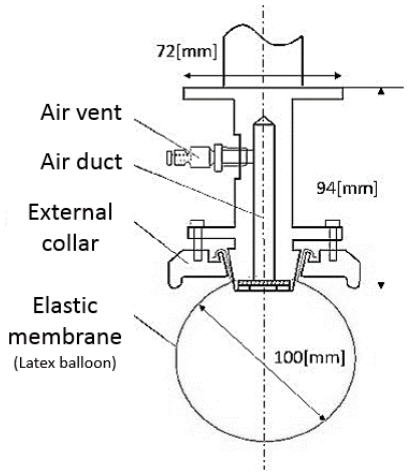


(a) Schematic of the UJG structure

(b) Overview of the operation

Fig. 1. Prototype of the universal jamming gripper (UJG).

filling material and the maximum volume of the balloon. As the target object to be gripped in the experiment, an ordinary pen.

The grip force of the UJG was measured in the following way: 1) the pen tied by a thread was gripped by the UJG and lifted upward, 2) the thread was pulled in a downward direction by a force gauge until the pen fell, and 3) the maximum force recorded by the force gauge was used.


Fig. 2. Filling materials

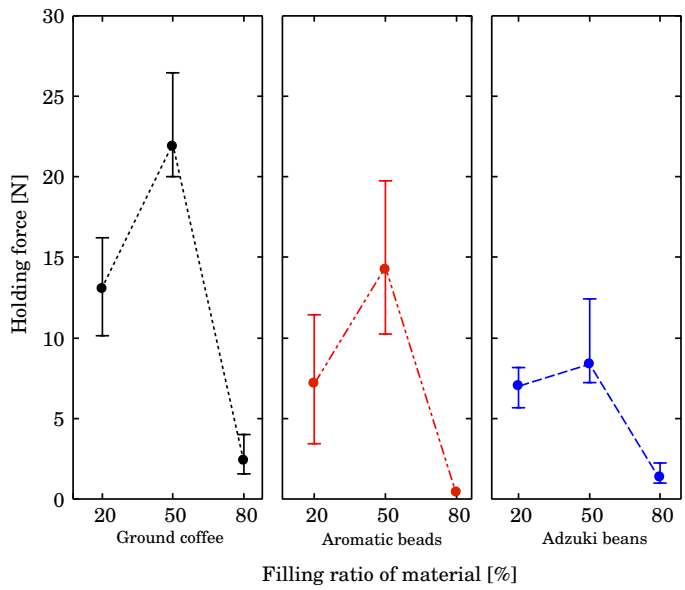


Fig. 3. Verification result of the holding force in the case of changing the filling factor

### B. Relationship between the filling ratio and grip force

Change in the grip force of the UJG was investigated for various combinations of material and filling ratio shown in Table I. However, because the grip force of the UJG changes according to the press force in the press operation, the experiment was carried out for various press forces. The results are shown in Fig. 3. Although the measurements of grip force show variation because the press forces were not constant, these results show that the grip force reaches the maximum when the filling ratio of all the filling materials is 50%.

Next, the photograph of the balloon of UJG holding the target for each filling material is shown in Fig. 4.

In the gripping experiment using ground coffee, the process of gripping the target object by composition of the frictional force and the grip force was observed (see Fig. 4(a)). In contrast, the adzuki beans and aromatic beads showed comparatively large ellipsoids, and the surface area to which a target object contacts the UJG decreased (see Fig. 4(b) and (c)). Therefore, these frictional forces became smaller than that for the ground coffee, and the grip forces decreased.

From these experimental results, it can be seen that small particles are desirable and frictional force is important Moreover, a filling ratio of 50 % is suitable for the UJG.

TABLE I. PARTICLE SIZE AND WEIGHT AND THE FILLING RATIO

| | Adzuki beans | Aromatic beads | Ground coffee |
|---|---|---|---|
| Filling ratio 20% | 51 [g] | 36 [g] | 30 [g] |
| Filling ratio 50% | 94 [g] | 67 [g] | 55 [g] |
| Filling ratio 80% | 150 [g] | 98 [g] | 80 [g] |
| Size of a particle | 6-7 [mm] | 3-5 [mm] | 0.1-1.5 [mm] |

(a) Ground coffee

(b) Aromatic beads

(c) Adzuki beans

Fig. 4. Photograph of gripping for various filling materials

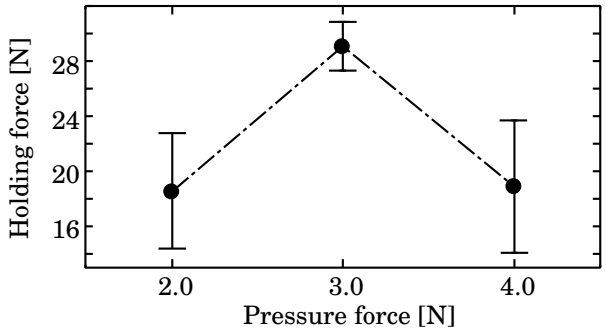


Fig. 5. Verification result of the holding force in the case of changing the filling factor

## IV. Press force

In the basic experiment described above, fluctuations occurred in the measurement of the grip forces because the press forces by the UJG on the target were not constant. This result suggests that the grip force changes with the press force. Thus, we conducted an experiment to confirm the relationship between the press force and the maximum grip force. The filling material and quantity for the UJG were chosen according the conditions in which the best result was achieved in the above-mentioned experiment, i.e., the filling material was ground coffee and the filling ratio was 50%. We varied the press force and observed the grip force. The experimental result is shown in Fig. 5. First, it is found that the press force of the UJG on a target object affects the grip force. Moreover, it is found that there is an appropriate force for maximizing the grip force of the UJG. That is, if the press force is too small or too large, the UJG cannot generete the maximum grip force. Furthermore, it is found that there is a tendency for the distribution of the fluctuation in grip force to reduce near the press force that generates the maximum grip force.

## V. Automatic hold mechanism

Based on the results from the previous experiment, we developed a force feedback mechanism for the detection of press force. At the press operation, the operation mode of the UJG changes to grip at the moment when the press force reached to a pre-programmed value of the force. The structure of the mechanism is shown in Fig. 6. The device consists of spring mechanisms of a load cell (Kyowa Electronic Instruments LMA-A-100N) and overload protection and was attached to the UJG. This load cell can measure the force from 0 [N] to 10 [N] along an axis, and the measurement value is output by the spring mechanism as follows:

$$y = \begin{cases} -x + b & (0 < x < b) \\ 0 & (b \leq x) \end{cases}, \tag{1}$$

where $x$ [N] is the press force, $y$ [N] is the measurement by the load cell, $b$ [N] (=80 [N]) is the initial bias generated by the spring mechanism. It is clear from this expression that the measurement range of a spring mechanism is $0 \leq y \leq b$. Because it is saturated with the minimum 0 [N] when the press force is $b$ [N], the load cell does not break down under overloading. The signal of the power measured by

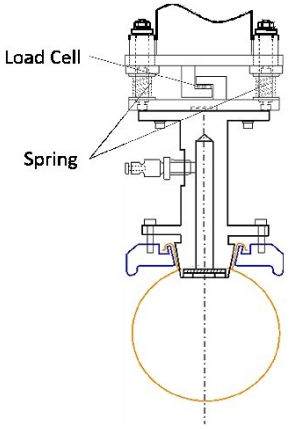


(a) Structure diagram.

(b) Photograph.

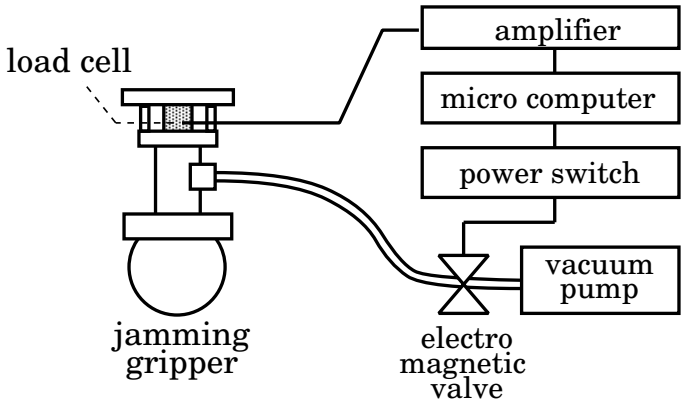


(c) Structure of the force feedback system.

Fig. 6. Prototype of universal jamming gripper with a force feedback mechanism.

these mechanisms was amplified with an amplifier (INA118U), which was then transmitted to a microcomputer (Arduino UNO R3) and compared with a pre-programmed value of the force. When moment the measured force reached the pre-programmed value, the grip operation of the UJG was started by switching on the electromagnetic valve. The weight of the UJG including these mechanisms is 1300 [g].

## VI. Experiments

We conducted several experiments on the UJG constructed as above, where ground coffee was adopted as the filling material, with a filling ratio of 50% and the threshold of the start of the grip operation as 3 [N]. First, as a result of conducting the grip experiment with objects of various forms, such as a dice, marble, battery dry cell, tape, and cup, it was confirmed that all forms can be gripped satisfactorily.

Next, we attached the developed gripper to a 6-axis industrial robot and conducted several grip experiments. We installed the gripper to the robot and programmed the robot so that it was able to manipulate its target object by playback. Then, we conducted several experiments to confirm the ability of the robot to grip various objects as shown in Fig. 7. It was confirmed from these experiments that the nonmagnetic


(a) Gripping a dice

(b) Gripping a cup

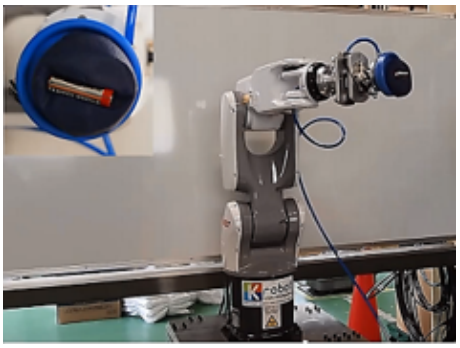

(c) Gripping a battery dry cell

Fig. 7. Holding experiment of the universal jamming gripper. It can hold various materials, such as dice, marble, battery dry cell, tape, and cup.

objects of various shapes can be gripped by the developed gripper system.

## VII. Conclusion

First, a prototype of the UJG was developed, and the relationship between the grip force and the filling ratio and

between the grip force and the type of filling material was investigated experimentally. It was found that ground coffee is suitable as the filling material, and a suitable filling ratio is approximately 50% of the volume of the elastic membrane. Moreover, it was found that the press force on a target object has an influence on the grip force. Next, it was confirmed by investigating the relationship between the press force and the grip force that there exists an optimal press force that maximizes the grip force of the UJG. Moreover, a force feedback mechanism that can press and can perform grip operation or release operation by a specified force was developed, and it was attached to the UJG. It was shown by the experiment that suitable automatic grip operation of the UJG and release operation are attained using this mechanism.

In future, we will consider investigating the force feedback along multiple axis orientations. Moreover, we will construct a mechanism for realizing the optimal press force and the manipulation based on posture measurement and recognition of a target object by combined use of sensors such as a camera.

## REFERENCES

[1] E. Brown, N. Rodenberg, J. Amend, A. Mozeika, E. Steltz, M. Zakin, H. Lipson, and H. Jaeger, "Universal robotic gripper based on the jamming of granular material," Proc. Nat. Acad. Sci., vol. 107, pp. 18809——18814, 2010.

[2] J. R. Amend, E. Brown, N. Rodenberg, H. M. Jaeger, H. Lipson, "A Positive Pressure Universal Gripper Based on the Jamming of Granular Material", IEEE Trans. on Robotics, vol. 28, pp. 341–350, 2012.

[3] T. Hatano, "Scaling Properties of Granular Rheology near the Jamming Transition", J. Soc. Jpn., p77, 2008.